8B.3 PROGRESS OF MULTIFUNCTION PHASED ARRAY RADAR (MPAR) PROGRAM

William E. Benner[1, *], Garth Torok[1], Mark Weber[3], Michael Emanuel[1],
Judson Stailey[2], John Cho[3], Robert Blasewitz[4]
[1]Federal Aviation Administration, Atlantic City Airport, NJ
[2]Office of the Federal Coordinator for Meteorology, Silver Spring, MD
[3]Massachusetts Institute of Technology Lincoln Laboratory, Lexington, MA
[4]Basic Commerce and Industry, Moorestown, NJ

1 PROGRAM OVERVIEW

This paper will discuss the progress the Multi-function Phased Array Radar (MPAR) research program has made over the last 2 years as well as insight into the program strategy for moving forward. It follows the paper *MPAR Program Overview and Status* (Benner et. al 2006) presented at the 87th AMS conference in San Antonio, TX. Several noteworthy events and initiatives have taken place including significant research in semi-conductor technology, and advances in transmit/receive module design and phased array architectures. These activities are the beginning to creating a pathway forward towards system affordability.

The Department of Homeland Security (DHS) has expanded the MPAR multi-agency partnership and is working to identify DHS surveillance requirements as well as sponsoring needed research such as mitigation of wind-farm interference on radar systems. This research compliments other agency research activity such as the evaluation of the impact of MPAR's faster scanning rates to aviation weather algorithms (e.g., how it will help better model storm growth and decay) and the exploration of simultaneous dual polarization for phased array radars. The ability of an MPAR system to simultaneously support both weather and surveillance missions remain both a challenge and a goal.

The MPAR program plan calls for an industry technology demonstration phase followed by the initiation of a prototype development effort within the next five years. This paper will provide the progress the program has accomplished.

The FAA is MPAR's impact on safety and efficiency-enhancing weather services. Data has been collected from the National Oceanic and Atmospheric Administration's (NOAA) National Severe Storm Laboratory's (NSSL) National Weather Radar Testbed (NWRT) in Norman, OK in support of this effort. For an update on the progress of the NWRT see paper 8B.2, *The National Weather Radar Testbed (Phased-Array) – a progress report*. This analysis will focus on MPAR's potential to improve thunderstorm forecasts using MPAR's higher temporal resolution and improved data quality relative to today's radars. While the tasks focus on the convective forecasting challenge, the results should expose MPAR benefits for other aviation weather services such as improved wind shear and turbulence detection, improved modeling of the growth and decay of storms, near-airport wind forecasting and probabilistic forecasting required for the Next Generation Air Transportation System (NextGen).

2 RECENT INITIATIVES & EVENTS

2.1 JAG/PARP Report—First steps in Interagency Activity

The 2006 Joint Action Group/Phased Array Radar Project (JAG/PARP) report (OFCM 2006), *Federal Research and Development Needs and Priorities for Phased Array Radar (PAR)*, was the first comprehensive look at employing technology in a multifunction system. It explored the possibility of replacing FAA's airport surveillance radars (ASRs), air route surveillance radars (ARSRs), and Terminal Doppler Weather Radars (TDWRs), as well as the NWS/DOD/FAA Weather Surveillance Radar Model 88 Doppler (WSR-88D),

* *Corresponding author address:* William Benner
FAA William J Hughes Technical Center, AJP-B400
Atlantic City Airport, NJ, 08405

commonly known as NEXRAD, with scalable PARs designed to meet the requirements of these systems. In this scenario, a total of 513 of at least seven types of radar systems would be replaced by about 335 MPARs (Figure 1). The report suggested service improvements that would be expected from using MPAR for weather surveillance, addressed anticipated technical issues associated with the technology, and presented a preliminary cost analysis. This analysis showed that aggressive MPAR implementation might save $3 billion over twenty-years compared to a "sustain and replace" strategy for legacy radar systems.

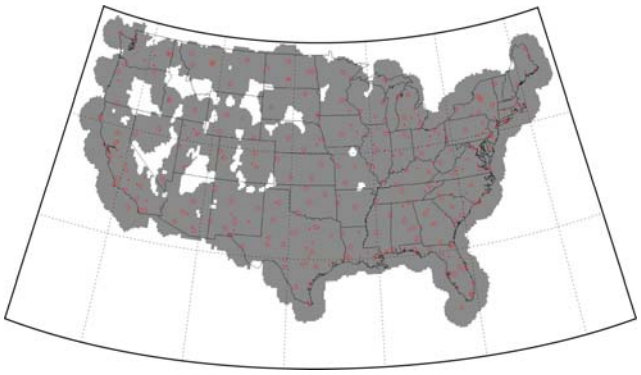

Figure 1: *Deployment plan for MPAR systems showing coverage at 5000 ft AGL*

2.2 MPAR Symposium—Foundation for the Implementation Strategy

The JAG/PARP report served as the stepping off point for further initiatives, including the MPAR Symposium held in October 2007. The program was attended by 181 participants. Contributors to the symposium included panels of experts addressing a series of MPAR issues, including views from potential users, status of military applications of PAR, the industry perspective, component technology and cost, and alternative configurations. Finally, the participants proposed two key initiatives to focus and energize the MPAR effort—developing an interagency management approach for MPAR and developing a risk-reduction implementation strategy.

The Office for the Federal Coordinator for Meteorology (OFCM) is now taking the first steps in establishing an interagency management approach for MPAR, considering alternative approaches to providing guidance to the Working Group on MPAR (WG/MPAR) until such time as it becomes appropriate to charter a Program Council or similar body to oversee a more formal program. At the same time, the membership of WG/MPAR is under review to ensure that the right people are in place to represent the agencies and to foster effective decisions. Meanwhile, joint action groups are being established to address specific technical issues using the appropriate subject matter experts.

Immediately following the symposium, the WG/MPAR moved out to address the action item calling for development of a risk-reduction implementation strategy. The principal basis for the implementation strategy is the agency roadmaps and other planning documents that contain decision points on how to continue the essential functions performed by current radar systems and how to satisfy future missions.

The implementation strategy recognizes several key needs:

- Requirements definition and concept of operations completed in the near term
- Development of a prototype system to validate performance, mitigate technical risks, and verify affordability
- Enhancement of NWRT (including eventual development of a pre-prototype system) to improve algorithms, explore service improvements, investigate affordability issues, and demonstrate simultaneous weather and aircraft surveillance capability
- Explore systems design concepts and monitor cost/capability trade-offs of transmit/receive modules
- Complete definitive cost-benefit analyses of alternatives, including non-MPAR solutions
- Address citing and frequency management considerations

2.3 BASC Study—Validation and Encouragement

On August 11, 2008, the Board on Atmospheric Sciences and Climate (BASC) Committee on the Evaluation of the MPAR Planning Process

released its report (National Academies Press 2008) on the review of MPAR planning activities requested by the WG/MPAR. The committee grouped the recommendations into four major areas and presented an additional overarching recommendation. Several recommendations addressed the MPAR R&D Plan, which was published as Appendix D to the JAG/PARP report. Some of those recommendations dealt with the plan itself (e.g., calling for expanding and frequently updating it), while others dealt with detailed suggestions for actions to take during the R&D process. Because PAR technology is mature for aircraft surveillance applications, most of the technical challenges driving the JAG/PARP R&D plan and the BASC comments on that plan addressed weather surveillance applications. Recommendations related to requirements called for developing a set of detailed requirements (including for the proposed airport terminal area MPAR derivative) and considering MPAR as member of a family of systems. Technical recommendations addressed calibration and frequency allocation issues. Finally, the panel cautioned that the preliminary cost evaluation in the JAG/PARP report was "promising, but embryonic," and recommended a thorough cost-benefit analysis for the multifunction system and for a PAR replacement for weather radars (WSR-88D and TDWR) only.

The overarching recommendation of the BASC study was to continue the MPAR R&D program. The WG/MPAR reviewed the other recommendations carefully in the context of the Risk-Reduction Implementation Strategy. Many of the BASC recommendations were on a different level from the strategy and could not be logically mapped into it. However, the appropriate recommendations were mapped into the Strategy to facilitate a comparison between it and the BASC report. Although a few minor adjustments are planned to synchronize the Strategy with the BASC report, it is fair to say that the appropriate BASC recommendations are, for the most part, consistent with and validate the MPAR Risk-Reduction Implementation Strategy.

2.4 Other Events—Surveillance Summit / BAMS

In June 2007, June 2008, and again in December 2008, DHS sponsored an interagency surveillance summit with military, civilian, and commercial stakeholders. An overview of the current airspace domain awareness infrastructure was presented, in addition to future requirements that would be required to satisfy NextGen and military needs. The potential benefits of a national network of MPAR were presented as a means of satisfying the critical missions of the represented departments.

Additionally, the Bulletin for the American Meteorological Society (BAMS), in the November 2007 issue, presented two articles devoted to MPAR, *The Next-Generation Multi-Mission U.S. Surveillance Radar Network* (Weber et. al 2007) and *Agile Beam Phased Array Radar for Weather Observations* (Zrnić et. al 2007), to further focus the involvement and effort of the agencies to make MPAR a reality.

3 RECENT TECHNOLOGY PROGRESS

3.1 Semiconductor Advances

Phased array radars have seen significant changes over the past few decades, which take the technology platform from a passive to active architecture that leverages breakthroughs in the digital, Wi-Fi and Monolithic Microwave Integrated Circuits (MMIC) technology arenas.

Power Amplifier (PA) performance improvements are allowing cost savings to be identified. Higher efficiency RF amplifiers are now a reality with advanced MMIC technology such as Gallium Nitride (GaN). It appears that GaN can now produce devices with high efficiency and variable power which in turn can facilitate very high efficiency phased array systems. These COTS components may be the cost reduction facilitator for future MPAR systems since they are used in the basic building block of the MPAR antenna, the Transmit/Receive module. They are COTS based, low cost, low power consumers, and have a non-hermetic assembly. The keys to low cost modules include:

(1) COTS components and processes
(2) Similarity to commercial PC motherboard construction
(3) Use of surface mount plastic encapsulated components
(4) Leveraging commercial production lines and manufacturing infrastructure

As commercial communications systems developers began expanding the wireless infrastructure in the 1980s, escalating performance demands drove researchers to explore alternative strategies capable of meeting the higher power efficiencies required for PAs in base stations. Wireless base station engineers need PAs capable of offering higher linearity to satisfy system design, and this remains a constant trade-off among performance attributes. Historically, designers have had to balance improvements in power output or gain against limitations in linearity or efficiency. However, the continual evolution of silicon RF power transistors is gradually undermining that perception. With each new generation developers have been able to tweak architectures to meet new performance requirements. With MPAR these technologies offer the opportunity to fabricate low cost commercial T/R modules, making it an affordable alternative for the advanced applications it is best suited to successfully meet.

A typical low cost module is illustrated in Figure 2 courtesy of CREE. Other commercial designers and manufactures such as M/A-COM are also making significant advances in MMIC technology, especially in the area of commercial manufacturing practices. Complete manufactured units such as Radio Frequency Identification Devices (RFID) and automotive radars, as shown in Figure 3, are already in production.

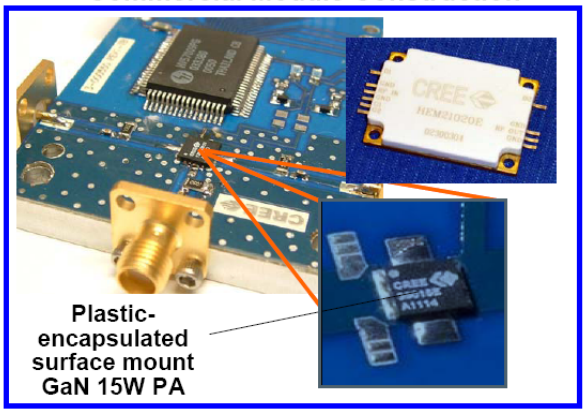

Figure 2: *CREE Low cost commercial T/R Module*

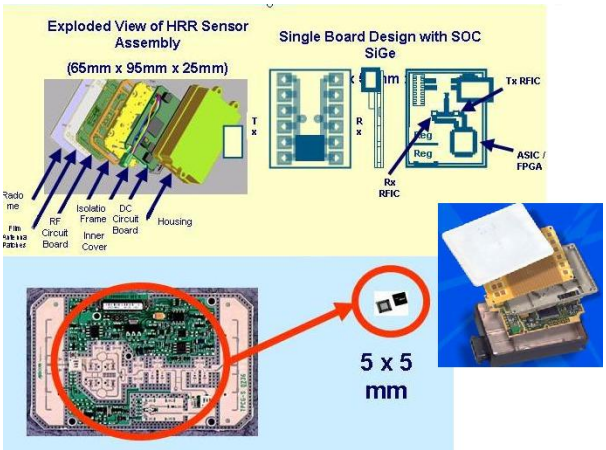

Figure 3: *M/A-COM Automotive radar and T/R module showing chip evolution and footprint reduction*

3.2 Dual Polarization Efforts

The improvements associated with polarimetric radar come from their ability to provide previously unavailable information on cloud and precipitation particle size, shape, and ice density. With this in mind, just a few of the potential applications of polarimetric radar data are listed below.

- Improved estimation of rain and snow rates.
- Discrimination of hail from rain and possibly gauging hail size.
- Identification of precipitation type in winter storms.
- Identification of electrically active storms.
- Identification of aircraft icing conditions.

This polarization challenge is also associated with at least two trade-off opportunities with respect to design, namely:

- Sequential Transmit, Simultaneous Receive
- Simultaneous Transmit, Simultaneous Receive

The MPAR program is funding both of these efforts. In sequential transmission, vertical and horizontal transmissions occur in sequence, one following the other whereas in simultaneous, both polarizations are transmitted together. The impact on weather data, performance, cost and implementation has not been researched fully at this stage in the development of these architectures. The tradeoffs could reveal interesting cost (T/R module) and performance data that improves the selection of viable, cost effective MPAR systems. Coupled with these challenges are the demanding weather requirements for dual polarization performance.

3.3 FAA Design Activities

Through the continued partnership with the FAA, Massachusetts Institute of Technology's (MIT) Lincoln Laboratory (LL) has made significant advances in the design architecture of its Transmit and Receive (T/R) module. LL's preliminary design specified single RF chains for both transmit and receive, as depicted in Figure 4, enabling a sequential transmit and receive strategy for implementing dual polarization. However, it soon became clear that a simultaneous receive polarization strategy would be required as the weather requirements for MPAR became more defined. To apply this functionality, LL modified their design to implement dual transmit and receive chains for each linear polarization (see Figure 4). Also added to the latest T/R design is a second receive beam former. Though this did add some complexity to integrated circuit, it removes the need for a diplexer, which has been identified as a significant cost driver. A partnership between LL and M/A-COM is facilitating this technology.

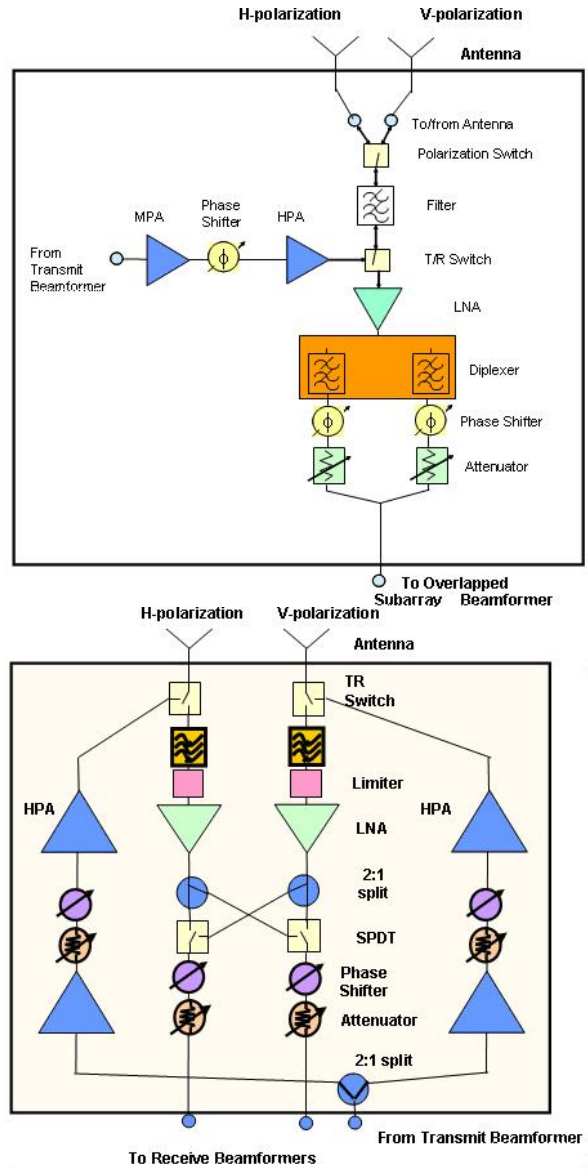

Figure 4: *LL T/R Module Design Evolution*

While it would be possible to implement simultaneous transmit and simultaneous receive with the updated design, there is concern that the resulting cross polarization isolation would fall outside of acceptable tolerances. This effort will continue to investigate a sequential transmit, simultaneous receive strategy that offers a possible compromise between hardware complexity, cost, and performance. This approach also presents more flexible beam management for weather and aircraft surveillance via

reconfiguration of the dual receive beam clusters. Furthermore, it is anticipated that the simultaneous receive dual polarizations will help with scanning time budget problems, and that the inherent orthogonal polarizations will aid in obtaining better air speed vectors.

3.4 NOAA/NSSL Dual Polarization Activities

NOAA/NSSL is also funding research efforts focused on dual polarization. A proposed architecture as modeled in Figure 5, employs active T/R module design with an analog/digital transceiver chain supporting simultaneous dual polarization frequency operation. This research will continue with the target product being a dual pol phased array design that is low cost and meets the demanding weather challenges including:

(1) Producing very accurate vertical and horizontal transmissions and receptions
(2) Calibrating the array over all possible scan angles
(3) Viable cost for the T/R modules
(4) Antenna architectures that meet demanding cross polarization requirements

3.5 Digital Beamforming—DBF

Other research the MPAR program is pursuing includes digital beamforming. Digital beamforming consists of the spatial filtering of a signal where the phase shifting, amplitude scaling, and adding are implemented digitally. The idea is to use a computational and programmable environment which processes a signal in the digital domain to control the progressive phase shift between each antenna element in the array. Digital beamforming has many of the advantages over its analog counterpart. In most cases, less power is needed to perform the beam steering of the phased array antenna. Another advantage is the reduction of variations associated with time, temperature, and other environmental changes found in analog devices. An important reason which favors the use of a digital beamformer on a phased array antenna is its versatility. Digital beamformers can minimize side-lobe levels, provide interference canceling and multiple beam operation without changing the physical architecture of the phased array antenna. Every mode of operation of the digital beamformer is created and controlled by means of code written on a programmable device of the digital beamformer.

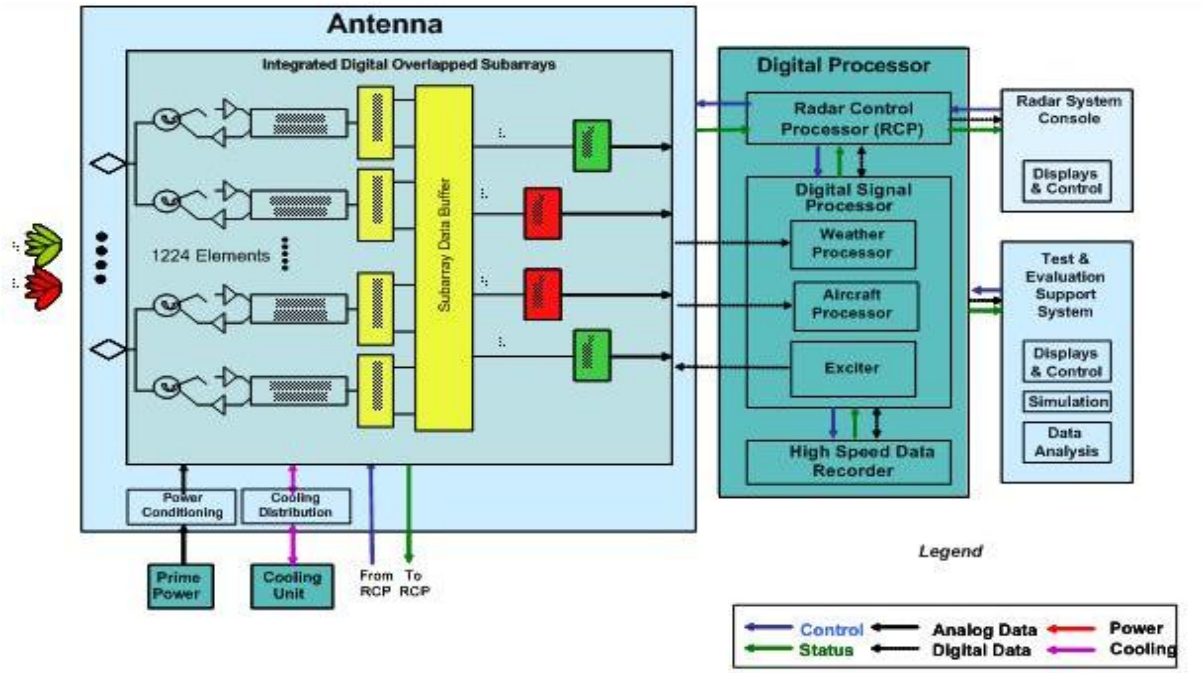

Figure 5: *MPAR Prototype Array System for Dual Pol Research Using Active Array Technology*

Digital beamforming (DBF) is a rapidly developing technology which is the most advanced approach to phased array antenna pattern control. When implemented at the array element level, DBF enables full utilization of the maximum number of degrees of freedom in the array. This can lead to significant improvements in beamforming of simultaneous multiple independent beams, adaptive pattern nulling, space-time adaptive processing (STAP), and direction finding (DF), compared to traditional analog array control techniques. Because of its flexibility, DBF may find use in a wide range of phased array antenna applications including MPAR. Digital beam forming networks are based on low cost COTS components and well established algorithms that are implemented in either firmware or software. The following Figure 6 illustrates a complete digital beamforming network which can share one common set of antenna elements. Figure 7 illustrates a DBF system for a MPAR. In digital beamforming, many beamformers can share one set of antenna elements, RF translators, and A/D converters. The beamformers may have their central beams pointed in different directions for the weather sensing capability or for advanced surveillance requirements. In situations where a fixed set of non-overlapping beams must be formed simultaneously an FFT can implement many beamformers efficiently and at very low cost. Figure 6 shows a Fast Fourier Transform (FFT) beamformer with N antenna elements. Each element requires a Digital Down-Converter (DDC). All DDC's produce a baseband sample simultaneously, and all of these are passed at once to an N-point complex FFT. The FFT then produces a set of N complex outputs, each of which is the next baseband sample for a different beam, commonly referred to as element space beamforming.

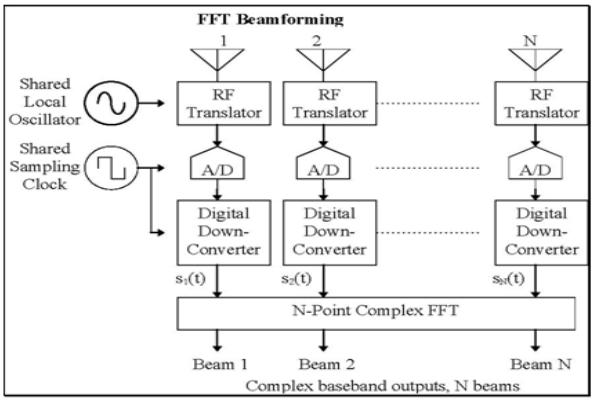

Figure 6: *A Typical FFT Based DBF Network*

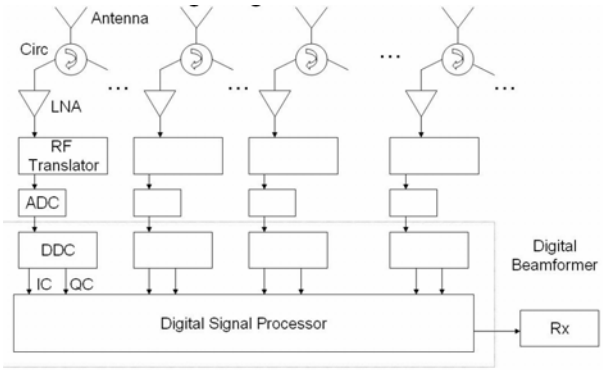

Figure 7: *MPAR Implementation Using a Digital Beamformer*

Today's state-of-the-art DBF phased arrays are primarily of laboratory prototype quality, and employ digital receivers only at the subarray-level. This is due to challenges both with RF receiver hardware, including reduction of size, mass, and DC power consumption, as well as digital challenges that include increasing ADC sampling rate, implementing digital sub-banding and digital time delays, and processing enormous data loads associated with DBF algorithms. Essentially the DBF challenge requires some engineering tradeoffs between speed, cost, performance and complexity.

DBF is the most advanced approach to phased-array antenna pattern control and has been proven as an effective technology on several DOD programs. It provides significant performance advantages over conventional analog

beamforming techniques, including improved operations in severe environmental clutter and, through the use of multiple simultaneous beams, increased search and track timeline efficiency.

One such model used by Lockheed Martin is an active, electronically-steered digital array radar designed to be scalable to support multiple missions, including air surveillance, cruise missile defense, ballistic missile defense, counter target acquisition and littoral operations called S4R. The proven digital array radar design is derived from the S-band antenna developed for the U.S. Navy's next-generation destroyer. The DBF signal processor was derived from the Aegis Ballistic Missile Defense signal processor. The S4R engineering development model was developed using Silicon Carbide (SiC) based high-power Transmit/Receive modules. With more power, the radar has longer range and provides more precise target discrimination.

4 MPAR AVIATION WEATHER BENEFITS

The FAA systems engineering directorate sponsored an effort to LL to ascertain the affect of improved weather data on the growth and decay algorithms used in the Corridor Integrated Weather System (CIWS). In the context of aviation weather services, some of the most important products for air traffic control may be enhanced by the availability of rapid-update MPAR data. Weather hazardous to aviation often features rapid evolution and vertical development. With an agile beam or multiple simultaneous beams, the MPAR can provide faster update cycles compared to traditional mechanically scanned radars, thereby improving the characterization and forecast of hazardous weather. This can have tremendous benefit when implemented as part of the Next Generation Air Transportation Systems, commonly referred to as NextGen. Figure 8 shows the observed use of CIWS products at various Air Route Traffic Control Centers (ARTCCs) in 2005 (Evans and Ducot 2006). Faster update of radar data that feed into CIWS can increase the accuracy of the growth and decay trends, which could, in turn, improve the quality of the precipitation and echo tops forecasts. A higher time resolution of the echo tops field could aid route availability planning and help improve turbulence forecast, and storm motion may be better characterized as well.

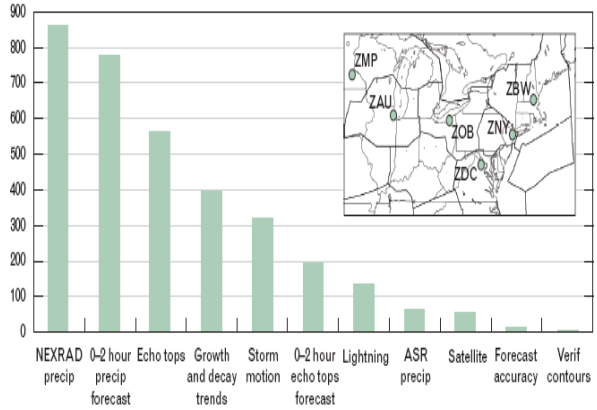

Figure 8: *Observed use of various CIWS products at the ARTCCs shown in the upper right panel in 2005.*

In order to test the impact of rapid update radar data on CIWS products, data was collected using the National Weather Radar Testbed (NWRT) in Norman, Oklahoma. The NWRT is one face of the SPY-1 phased array radar antenna connected to a NEXRAD transmitter and mounted on a rotating platform (Forsyth et al. 2008). The data sets were collected in 90° azimuth sector scans with elevation steps similar to NEXRAD volume scans. The update period of the volume scans was 34 s. Most of the cases were limited to less than 2 hours duration.

The basic plan for this study was to compare aviation weather service products produced with the NWRT data as input at a fine time resolution vs. a subsampled (coarse) resolution approximating NEXRAD data. In the first example, a single storm was tracked for echo top evolution. Figure 9 (Heinselman et. al 2008) shows the plan view of the storm reflectivity and the corresponding vertical cross section where the dotted white line cuts across the horizontal map. The storm top (circled) was observed to travel east at about 40 km/h approximately 45 km from the radar.

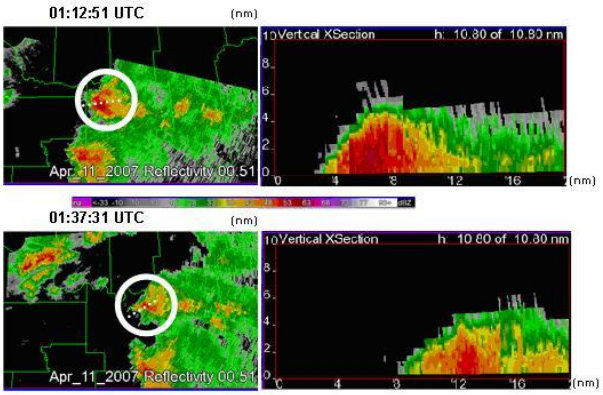

Figure 9: *Storm data collected by the NWRT on April 11, 2007. Plan view of reflectivity on the 0.5 elevation angle beam (left panels) and corresponding vertical cross sections of reflectivity following the dotted white lines (right panels).*

Figure 10 shows the time evolution of the echo top height of the storm cell depicted in Figure 9. The blue diamonds indicate the full sampling rate provided by the NWRT, whereas the orange squares correspond to a 5-minute period that would be more typical of NEXRAD data. The rapid update time series is able to capture short pulse peaks as well as the depth of the collapses, and enable faster detection of growth and decay trends. Conversely, the 5-minute sampling misses out on the higher frequency action of the echo top.

In the next example, 1-minute and 5-minute sampled NWRT data (to simulate MPAR and NEXRAD data) was fed into the convective weather forecast (CWF) algorithm used in the Integrated Terminal Weather System (ITWS). Figure 11 shows the results for the cell tracking vectors and the growth/decay and trend-modified fields for vertically integrated liquid water (VIL). Note the overestimation of the cell motion to the south and the lack of decay on the north side in the 5-minute data results. Similar examples of the rapid update data enabling better accuracy in the VIL growth and decay field were observed in a few other instances among the limited data sets that were available. Although it would have been ideal to make the same comparisons using the actual forecast outputs, this was deemed to be beyond the scope of this exploratory study due to the fact that the CWF algorithm is optimally tuned for NEXRAD data parameters

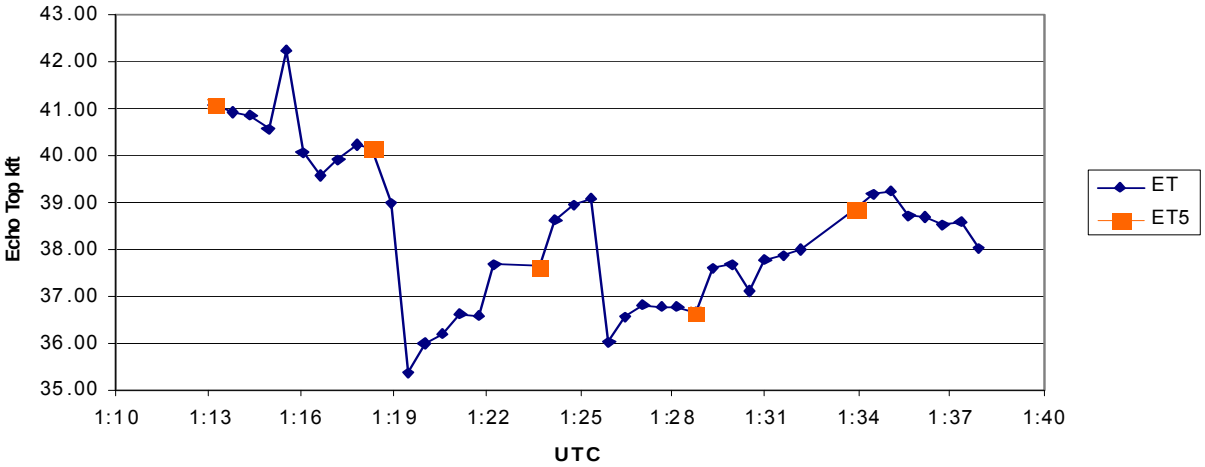

Figure 10: *Echo top height vs. time for the storm cell depicted in Figure 9 with time resolution of 34 s (blue diamonds) and 5 minutes (orange squares)*

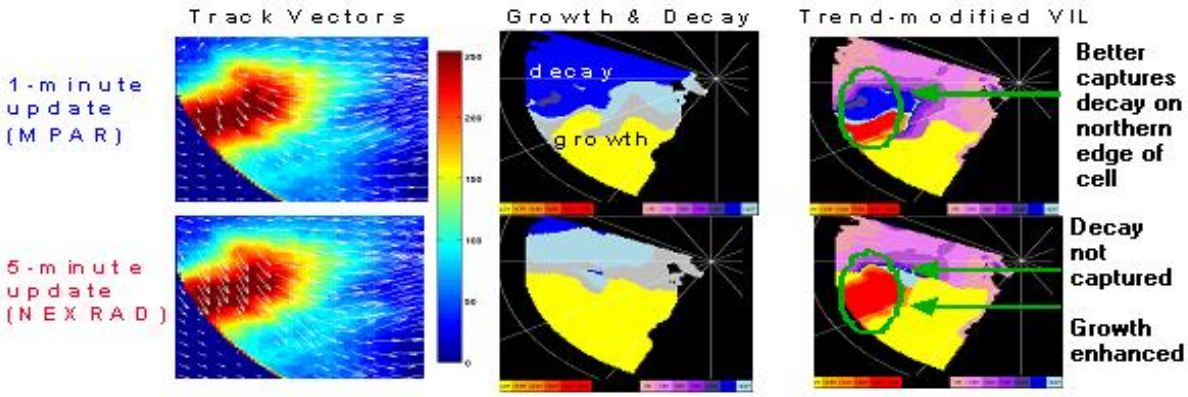

Figure 11: *VIL and cell tracking vectors (left), VIL growth and decay fields (center), and trend-modified VIL (right) for 1-minute update (top) and 5-minute update (bottom) NWRT data from April 25, 2006, 00:00Z fed into the ITWS CWF algorithm. The color scale units for VIL are kg m^{-2})*

MPAR could provide benefits for aviation weather services in other ways. For example, selective longer dwells in sectors with low signal-to-noise ratio (SNR) improve the radial velocity estimate accuracy. Fine beam steering, shaping, and adaptive sidelobe nulling (Le et al. 2007) can increase ground clutter suppression. Both of these enhancements can, in turn, result in better terminal winds (TWINDS) product and detection of hazardous wind shear. Spatial interferometry may be applied during certain conditions to obtain cross-beam velocity (Zhang and Doviak 2007), which may help in the accuracy of wind vector estimation on both sides of a gust front.

5 WIND FARMS

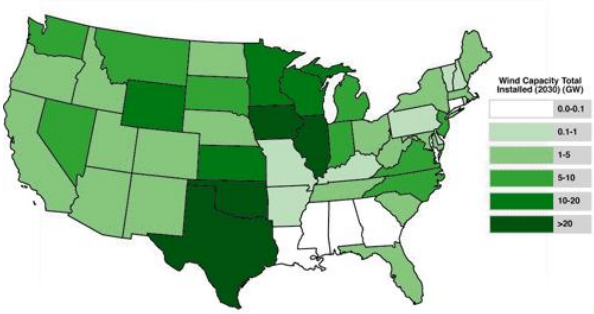

Figure 12: *Predicted wind farm power generation in Giga-Watts in 2030, From the National Renewable Energy Laboratory.*

The number of wind farms continues to increase as the demands for alternative sources of energy intensifies. Currently there are thousands of wind farms across the country and the continuing trend forward indicates that the number will only rise. Undoubtedly there are significant benefits to this renewable form of energy. However, there also have been several negative impacts observed as a result of the installation of wind farms, particularly with respect to radar tracking of weather and aircraft. Agencies including DOD and DHS have provided funding to analyze this phenomenon and several reports have been published in recent years detailing their findings. These include The Effect of Windmill Farms on Military Radar Readiness (Office of the Director of Defense Research and Engineering 2006) and the Wind Farm and Radar (Brenner et. al 2008). The outcomes of these, and other, studies consistently indicate that wind farms do indeed interfere with both aircraft and weather radar. Another common theme found in the studies is that a potential mitigation technique to the inference could be the deployment of a phased array radar network. Distinguishing between wind farms, weather and aircraft will be possible with increased processing power, adaptive scanning, and steerable beams inherent to this radar type

DHS as an MPAR partner is funding and additional research effort using the NWRT to further assess the effects of wind farms on radar and how a system using electronic beam steering can mitigate these affects. NOAA/NSSL is leading this effort.

6 TECHNOLOGY DEMONSTRATION PROGRAM

The FAA and NOAA have developed a preliminary program plan that would result in a technology demonstration system to help mitigate the programmatic and operational risks associated with MPAR. The demonstration system should prove that MPAR is a viable solution to satisfy the weather and surveillance requirements of the future. It is anticipated follow on MPAR prototypes will be designed, manufactured, and evaluated. The FAA Weather Roadmap in Figure 13(a) shows an evaluation period for MPAR concluding in 2017 with a Final Investment Decision (FID). The weather roadmap also indicates a FID in 2020 for a next generation weather radar capability to be part of the Reduced Weather Impact (RWI) solution set for NextGen. In addition FIDs in 2017 for new primary replacement radar are shown in the FAA Surveillance Roadmap, Figure 13(b). The discrepancies between the FIDs for the NextGen surveillance and weather capabilities are an item that is to be addressed in the next revision of the FAA's system roadmaps.

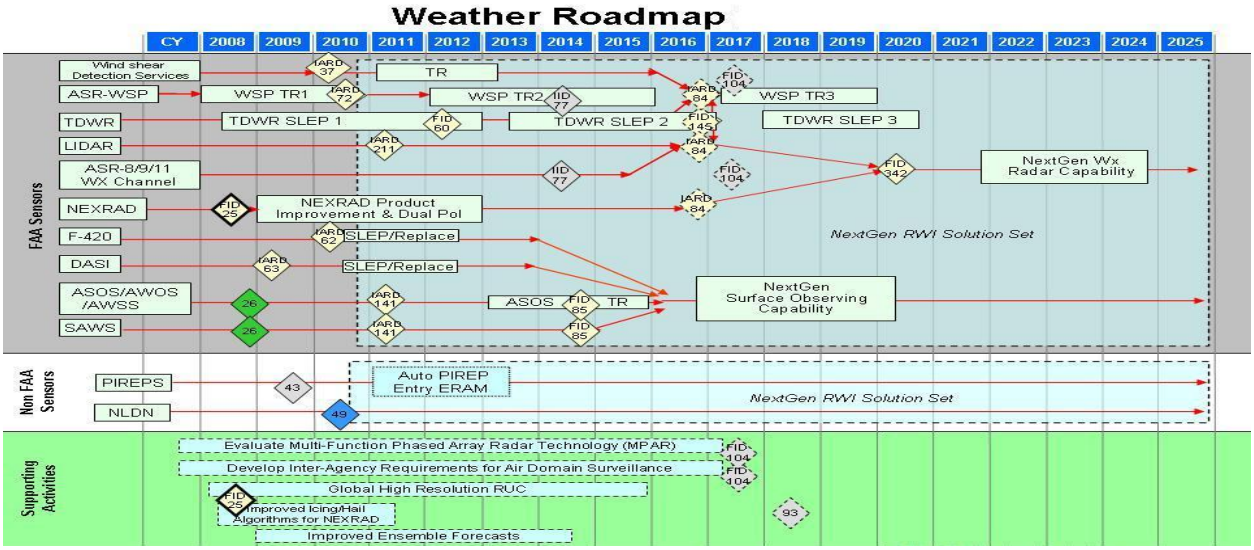

Figure 13 (a): *FAA's Weather Roadmap*

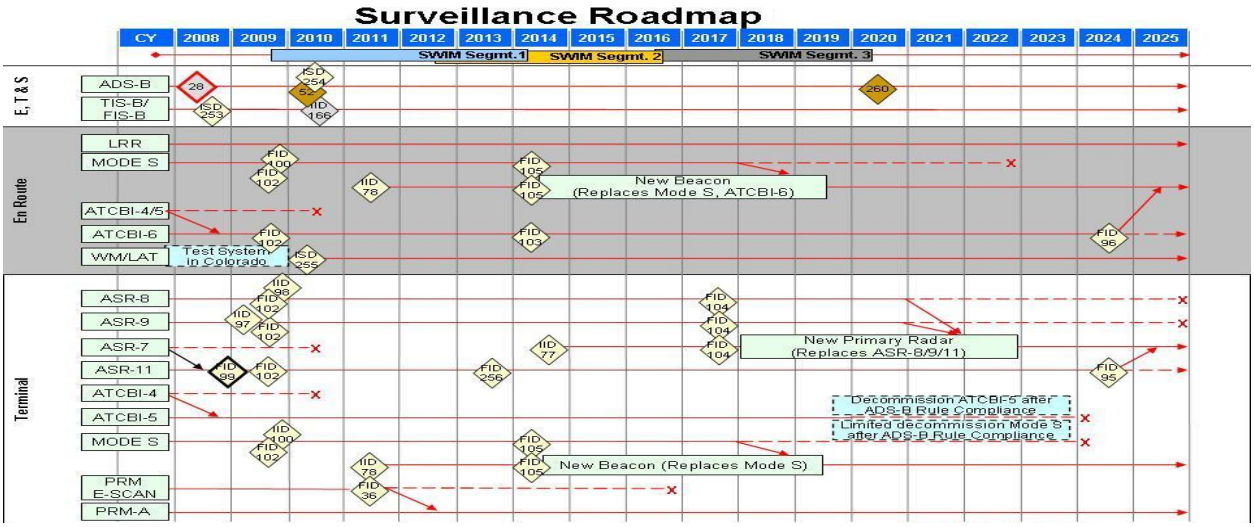

Figure 13 (b): *FAA's Surveillance Roadmap*

7 CHALLENGES

Though it is quite evident the benefit that would be achieved from a national MPAR network, there remains a number of technical, operational, and cost issues that would need to be addressed before MPAR can become a reality. The foremost challenge lies in demonstrating that the individual functionality required by both the weather and surveillance communities can be obtained from a single multifunctional environment. There are also challenge relates to dual polarization and the ability to satisfy cross polarization isolation requirements. Determining a means of accurate and repeatable calibration of the radar also remains a challenge to be addressed. Yet another challenge is with digital beamforming, specifically the tradeoffs associated with the overall MPAR architectural complexity versus capability.

Additional obstacles to overcome include the challenge of cost. Given the limited funding accessible to civilian government agencies, MPAR cost targets must fall within a practical range while still satisfying its operational requirements.

A final challenge is that of the program management of a multi-agency procurement. However, the success of the NEXRAD program that used a senior program council format, shows this to be a valid approach to a multi-agency program. While there are a great many risks and challenges ahead, the payoff would be significant. The National Research Council (NRC) has acknowledged this statement by recommending that "the MPAR Research and Development (R&D) program be continued with the objective of evaluating the degree to which a deployable MPAR system can satisfy the national weather and air surveillance needs cost effectively."

8 REFERENCES

Benner, W.E, Torok, G., Batista-Carver, M., Lee, T, 2006: MPAR Program Overview and Status.

Brenner, M, 2008: Wind Farms and Radar.

Evans, J. E., and E. R. Ducot, 2006: Corridor Integrated Weather System. *Linc. Lab. J.*, 16, 59-80.

Forsyth, D. E., J. F. Kimpel, D. S. Zrnić, R. Ferek, J. F. Heimmer, T. McNellis, J. E. Crain, A. M. Shapiro, R. J., Vogt, and W. Benner, 2008: Another update on the National Weather Radar Testbed (Phased-Array). Preprints, *24th Conf. on Interactive Information and Processing Systems*, New Orleans, LA, Amer. Meteor. Soc., 9A.1, http://ams.confex.com/ams/pdfpapers/134365.pdf.

Heinselman, P., D. Priegnitz, K. Manross, T. Smith, and R. Adams, 2008: Rapid sampling of severe storms by the National Weather Radar Testbed Phased Array Radar. *Wea. Forecasting*, in press.

Le, K. D., R. D. Palmer, T. Y. Yu, G. Zhang, S. M. Torres, and B. L. Cheong, 2007: Adaptive array processing for multi-mission phased array radar. Preprints, *33rd Int. Conf. on Radar Meteorology*, Cairns, Australia, Amer. Meteor. Soc., P7.2, http://ams.confex.com/ams/pdfpapers/123304.pdf.

National Academies, 2008: *Evaluation of the Multifunction Phased Array Radar Planning Process*, Report prepared by the National Research Council, Board on Atmospheric Sciences and Climate, National Academy Press.

Office of the Director of Defense Research and Engineering, 2006: The Effect of Windmill Farms on Military Readiness.

Office of the Federal Coordinator for Meteorology, 2006: *Federal Research and Development Needs and Priorities for Phased Array Radar, FMC-R25-2006*, Interdepartmental Committee for Meteorological Services and Supporting Research, Committee for Cooperative Research Joint Action Group for Phased Array Radar Project, 62 pp.

Weber, M. E., J. Y. N. Cho, J. S. Herd, J. M. Flavin, W. E. Benner, and G. S. Torok, 2007: The next-generation multimission U.S. surveillance radar network. *Bull. Amer. Meteor. Soc*., 88, 1739-1751.

Zhang, G., Doviak, R., Zrnic, D., Crain, J., Phased Array Radar Polarimetry for Weather Sensing: Challenges and Opportunities,*IGARSS* 2008

Zrnić, D. S., J. F. Kimpel, D. E. Forsyth, A. Shapiro, G. Crain, R. Ferek, J. Heimmer, W. Benner, T.J. McNellis, R.J. Vogt, 2007: Agile beam phased array radar for weather observations. *Bull. Amer. Meteor. Soc.*, 88, 1753-1766.